SYM	ECN NO.	DESCRIPTION	DATE	APP'D
A		RELEASE TO PRODUCTION	10.01.30	HL-Huang

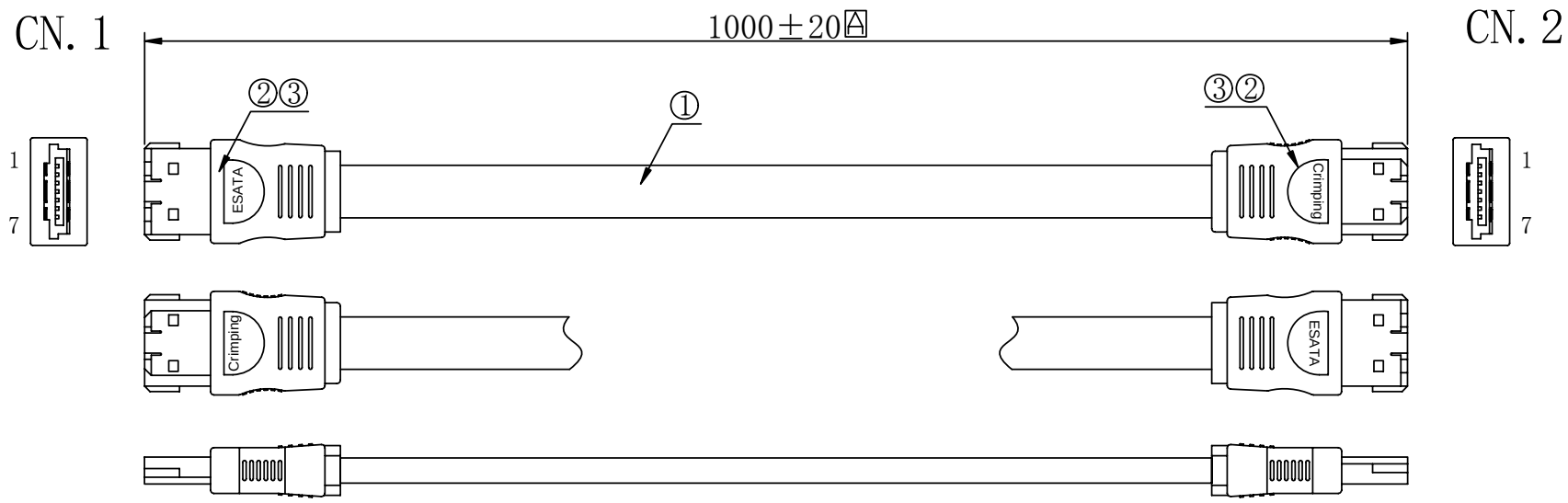

WIRE CONNECTION

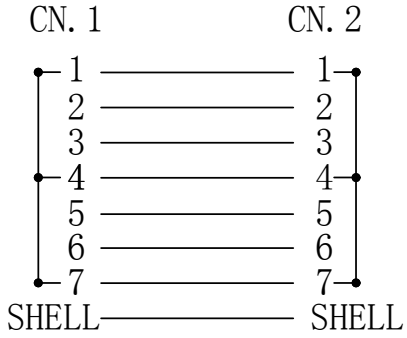

ELECTRICAL TEST:

a. OPEN/SHORT/INTERMITTENCE:100% TEST.
b. INSULATION RESISTANCE:20MΩ.(MIN)
c. CONDUCTIVE RESISTANCE:5Ω.(MAX)
d. HI-POT:300V AC/SEC .

ITEM	DESCRIPTION	Q'TY	UNIT
1	UL21149 SATA 7P [26AWG(1/0.32)*2C+AL]*2+3*DRAIN(1/0.32) +BRAID COLOR:BLACK	980±5	MM
2	E-SATA 7P TERMINAL:GOLD FLASH INSULATION:BLACK WITH SHELLED	2	SET
3	PVC:45P BLACK	10	G
REMARK:THE MARK"□"IS QC CHECK DIMENSIONS.			

APPROVALS		DATE
DRAWN	HL-Huang	10.01.30
CHK'D	JIM	10.01.30
APP'D	JIM	10.01.30

鴻巖精密電子有限公司
HOTWELL PRECISION ELECTRONICS CO., LTD

PART NO. HW-CB-SATA-001-002

DRAWING NO.

TITLE: E-SATA 7P TO E-SATA 7P CABLE

UNITS: mm | SCALE: NONE | SIZE: A4 | SHEET:1 OF 1 | REV. A